innovation in irrigation™ NELSON

SR100 BIG GUN®

SR100 BIG GUN® PARTS LIST

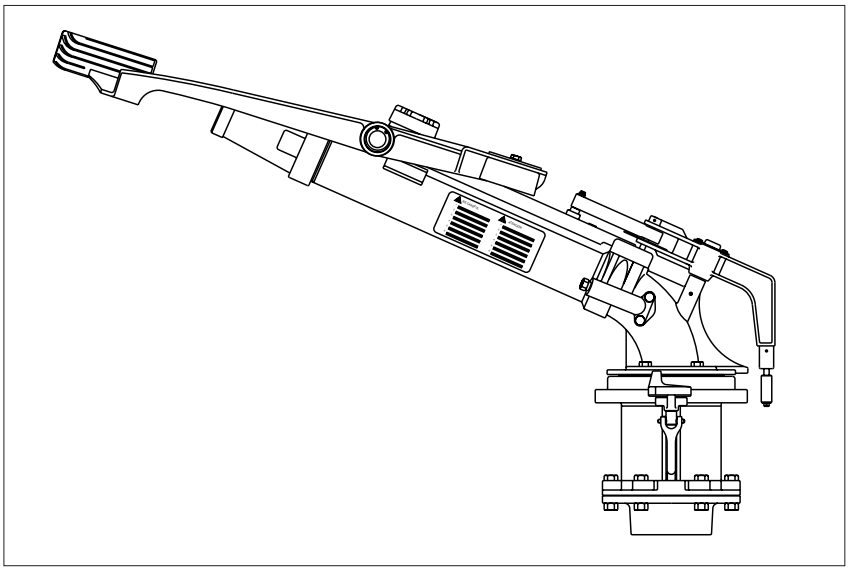

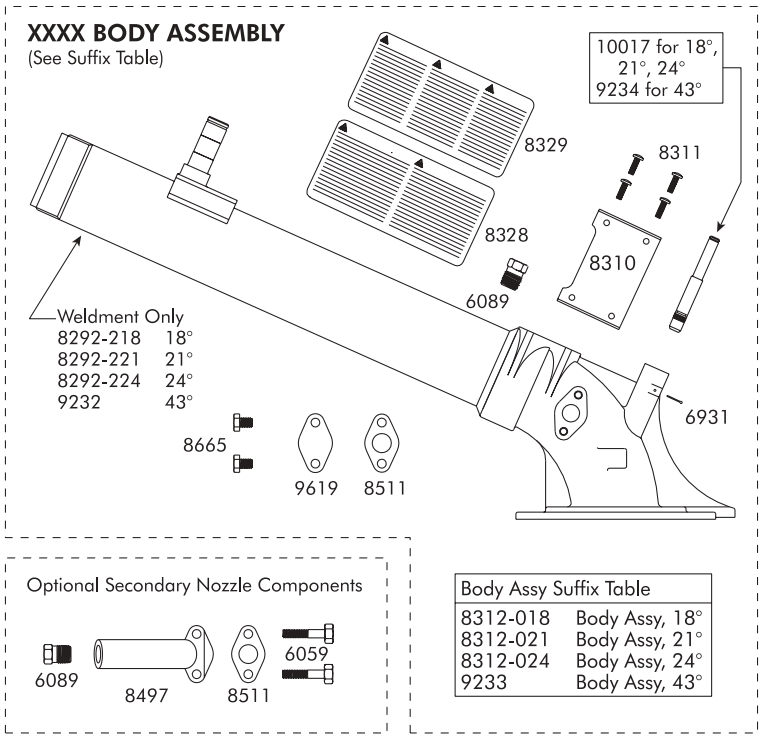

Body Assy Suffix Table	
8312-018	Body Assy, 18°
8312-021	Body Assy, 21°
8312-024	Body Assy, 24°
9233	Body Assy, 43°

XXXX part number	BODY ASSEMBLY, SR100 description	qty.
6089	3RN Plug	1
6580	Insert, Rest Pad	1
6931	Pin, Coiled Spring, .125" x .75"	1
8292-218	Tube & Elbow Assy, 18° — SR100	1
8292-221	Tube & Elbow Assy, 21° — SR100	1
8292-224	Tube & Elbow Assy, 24° — SR100	1
8310	Stop, Shifter — SR100	1
8311	Screw, #8-32 x .375" Self Tapping Pan Hd.	4
8328	Label, Warning — English, Spanish	1
8329	Label, Warning — German, French, Swedish	1
8511	Gasket	1
8665	Screw, 1/4-20 x .375" Hex Hd. Cap	2
9232	Tube & Elbow Assy, 43° — SR100	1
9234	Shaft, Trip Lever — SR100 43°	1
9619	Cover Plate, Sec. Elbow Port	1
10017	Shaft, Trip Lever — SR100 18°, 21°, 24°	1

OPTIONAL SECONDARY NOZZLE COMPONENTS		
6059	Screw, .25-20 x 1.25" Hex Hd Cap	2
6089	3RN Plug	1
8497	Elbow, Secondary Nozzle	1
8511	Gasket	1

innovation in irrigation™ NELSON

SR100 BIG GUN® PARTS LIST

1/02

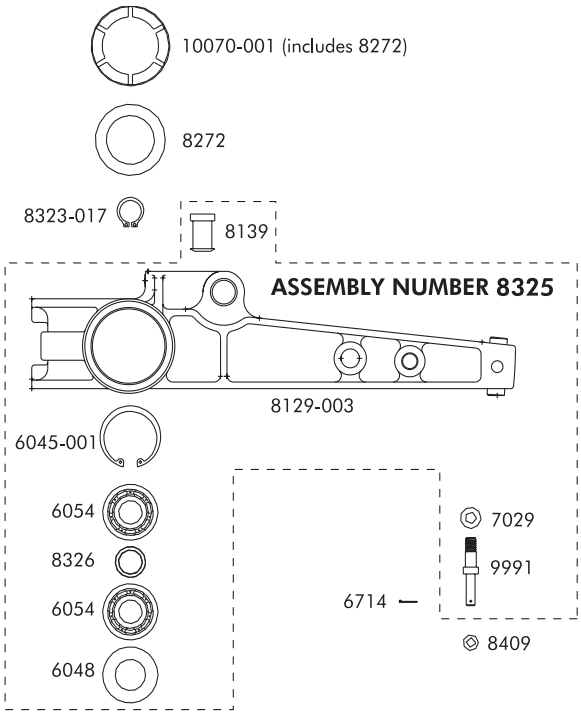

8325	SHIFT LEVER ASSEMBLY	
part number	description	qty.
6045-001	Ring, Retaining, -156 Basic Internal Coated	1
6048	Seal, Oil	1
6054	Bearing, Ball, 17 x 40 x 12mm	2
7029	Washer, .312" Spring Lock	1
8129-003	Lever, Shift — SR100	1
8139	Bumper	1
8326	Spacer, Shift Lever — SR100	1
9991	Pin, Shift, Hex Drive — SR100	1

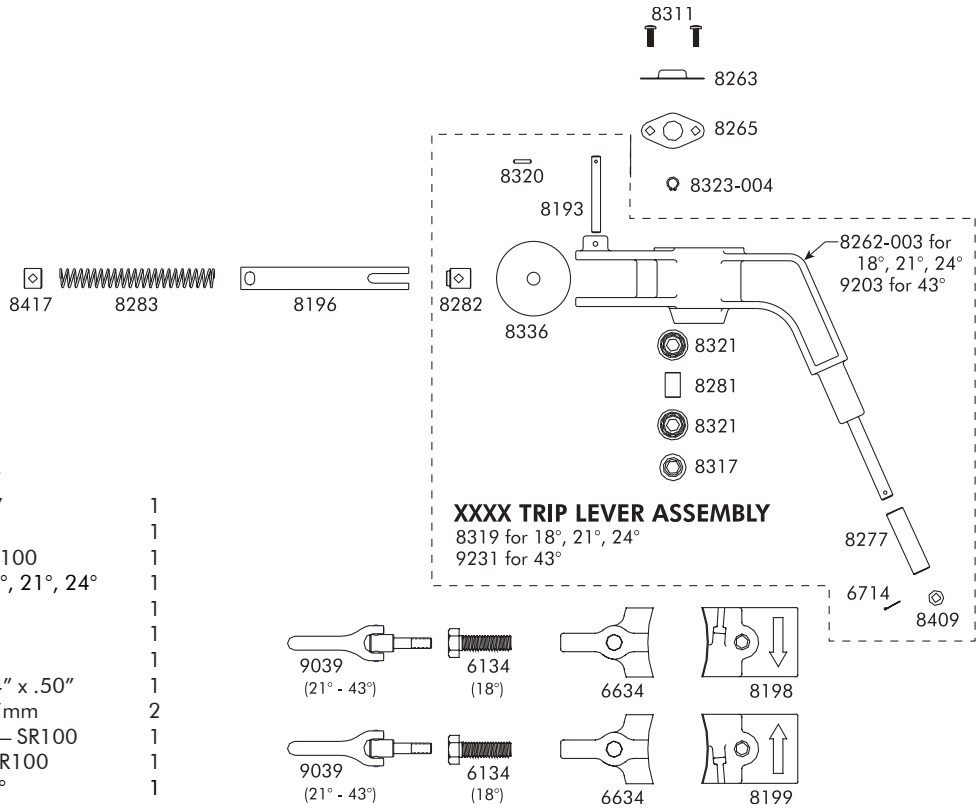

XXXX	TRIP LEVER ASSEMBLY	
6714	Pin, Cotter, .062" x .50"	1
8193	Pin, Stop — SR100	1
8281	Spacer, Trip Lever — SR100	1
8262-003	Lever, Trip — SR100 18°, 21°, 24°	1
8277	Roller, Trip — SR100	1
8282	Follower, Trip Spring	1
8317	Seal, Oil	1
8320	Pin, Coiled Spring, .094" x .50"	1
8321	Bearing, Ball, 8 x 22 x 7mm	2
8336	Washer, Spring Guide — SR100	1
8409	Washer, Trip Roller — SR100	1
9203	Lever, Trip — SR100 43°	1

Nelson Irrigation Corporation 848 Airport Rd. Walla Walla, WA 99362-2271 USA Tel: 509.525.7660 Fax: 509.525.7907 info@nelsonirrigation.com Web site: www.nelsonirrigation.com

innovation in irrigation™ NELSON

SR100 BIG GUN® PARTS LIST

1/02

8316 COUNTERWEIGHT ASSEMBLY, SR100

part number	description	qty.
6598	Bearing, Ball, 12 x 32 x 10mm	1
6600	Seal, Oil	2
8125	Counterweight — SR100	1

8314 DRIVE ARM ASSEMBLY, SR100

6580	Insert, Rest Pad	1
6598	Bearing, Ball, 12 x 32 x 10mm	2
6600	Seal, Oil	2
8139	Bumper	1
8234-003	Arm, Drive — SR100	1
8570	Ring, Retaining, -125 Basic Internal, Coated	1

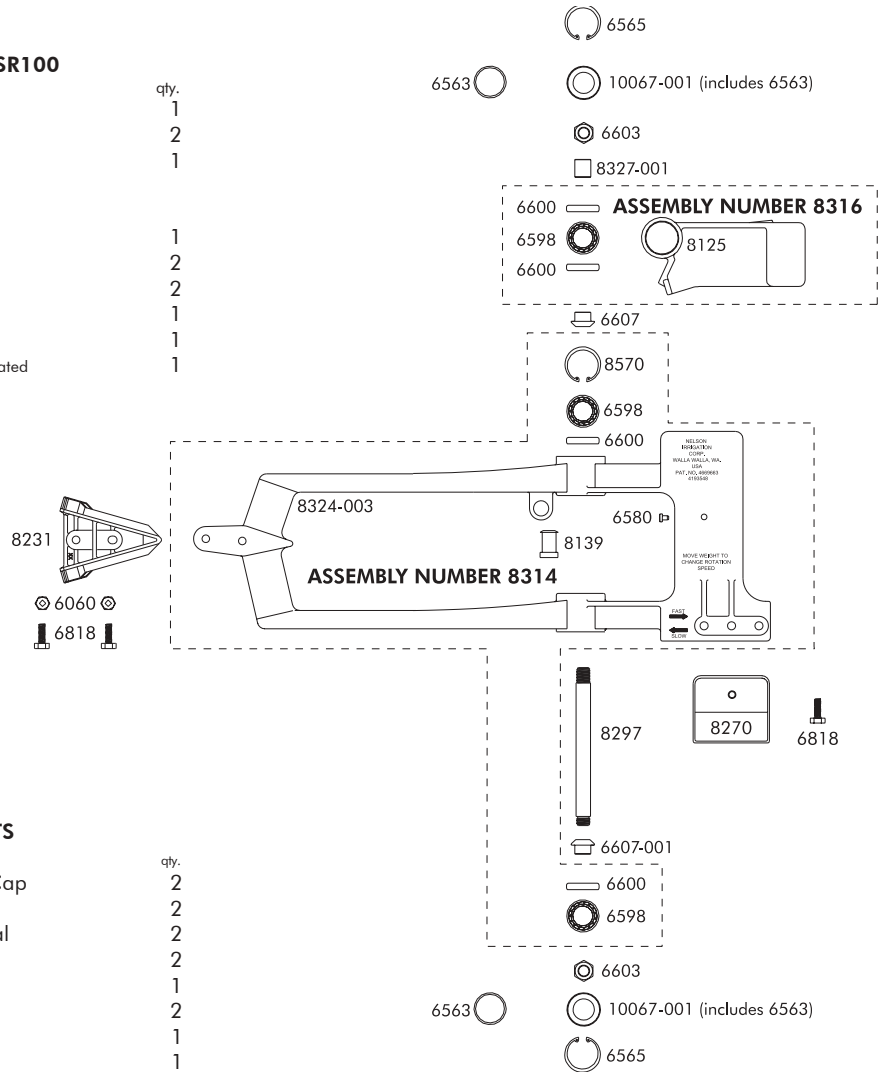

FINAL ASSEMBLY COMPONENTS

part number	description	qty.
6134	Screw, .312-18 x 1.00", Hex Hd Cap	2
6563	O-Ring, -024	2
6565	Ring, Retaining, -125 Basic Internal	2
6603	Nut, .438-20 Special	2
6607	Spacer, Brkt. to Cwt — F100	1
6634	Clamp - SR100	2
6714	Pin, Cotter, .062" x .50"	1
8196	Guide, Spring — SR100	1
8198	Stop, CCW — SR100	1
8199	Stop, CW — SR100	1
8263	Cap, Trip Lever — SR100	1
8265	Gasket, Trip Lever Cap — SR100	1
8272	Gasket, Shift Lever Cap — SR100	1
8283	Spring, Trip — SR100	1
8297	Shaft, Drive Arm — SR100	1
8311	Screw, #8-32 x .375", Self-Tapping Pan Head	4
8323-004	Ring, Retaining, -31 Basic External	1
8323-017	Ring, Retaining, -66 Basic External	1
8327-001	Spacer, Drive Arm to Cwt	1
8409	Washer, Roller — SR100	1
8417	Stop, Trip Spring	1
9039	Flex Handle Assembly	2
10067-001	Cap Assy, Arm Bearing — SR100	2

Nelson Irrigation Corporation 848 Airport Rd. Walla Walla, WA 99362-2271 USA Tel: 509.525.7660 Fax: 509.525.7907 info@nelsonirrigation.com Web site: www.nelsonirrigation.com

innovation in irrigation™ NELSON

SR100 BIG GUN® PARTS LIST

1/02

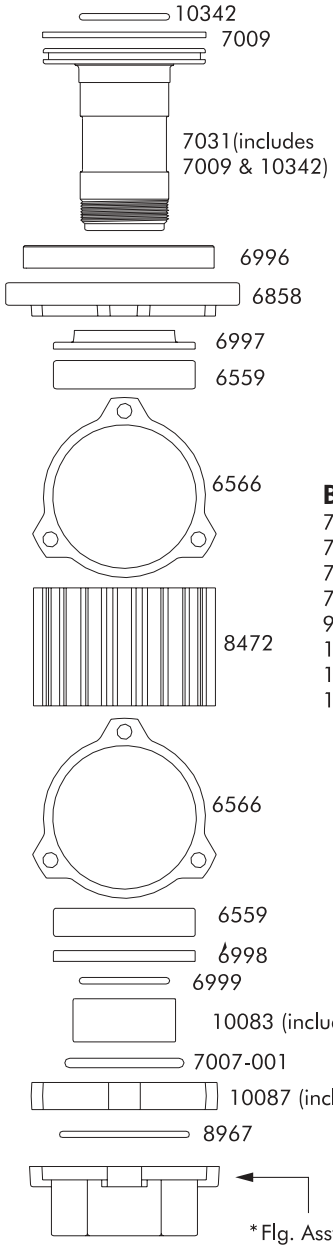

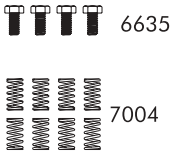

BEARING ASSEMBLY NOS.

7273	2" FNPT
7277	2.5" FNPT
7292	2" FBSP
7753	NELSON FLANGE
9814	METRIC FLANGE
10265-001	ANSI/DIN FLANGE
10380-001	1.5" FNPT
10380-004	1.5" FBSP

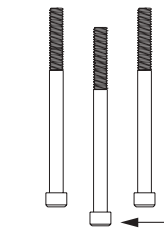

* Flg. Assy.	Connection	(3) Screws
10088-006	1.5" FNPT	7990
10088-007	1.5" FBSP	7990
10088-001	2" FNPT	7990
10088-003	2" FBSP	7990
10088-002	2.5" FNPT	7991
10086	Nelson Flg.	7006
10094	Metric Flg.	7006
10137-001	ANSI/DIN Flg.	7006

* Flg. Assy. includes 8967

BEARING ASSEMBLY HD 100

part number	description	qty.
6559	Bearing, Ball, 50 x 80 x 16mm	2
6566	Gasket, Housing - HD100	2
6635	Screw, 5/16-18 x 11/16" Hex Hd. Cap	4
6858	Cover, Part Circle - HD100	1
6996	Ring, Brake - HD100	1
6997	Seal, Upper - HD100	1
6998	Seal, Center - HD100	1
6999	O-Ring, -224	1
7004	Spring, Brake - HD100	8
7006	Screw, .312-18 x 3.50" Hex Skt Hd Cap	3
7007-001	O-Ring, -331, Special w/ Grease & Graphite	1
7009	Seal, Dust - HD100	1
7031	Shaft Assembly - HD100	1
7990	Screw, .312-18 x 4.25" Hex Hd Cap	3
7991	Screw, .312-18 x 4" Hex Skt Hd Cap	3
8472	Housing - HD100	1
8967	O-Ring -231, Special	1
10083	Retainer Assembly - HD100	1
10086	Flange Assembly, Nelson	1
10087	Spacer Assembly - HD100	1
10088-001	Flange Assembly, 2" FNPT	1
10088-002	Flange Assembly, 2.5" FNPT	1
10088-003	Flange Assembly, 2" FBSP	1
10088-006	Flange Assembly, 1.5" FNPT	1
10088-007	Flange Assembly, 1.5" FBSP	1
10094	Flange Assembly, Metric	1
10137-001	Flange Assembly, ANSI/DIN	1
10342	O-Ring, -225	1

MOUNTING HARDWARE

part number	description	qty.
7000	Gasket, Flange	1
7039	Screw, .312-18 x .75" Hex Skt Hd Cap	6
10149	Gasket, Metric Flange	1

FLANGE GASKET AND FASTENERS FOR MOUNTING GUN

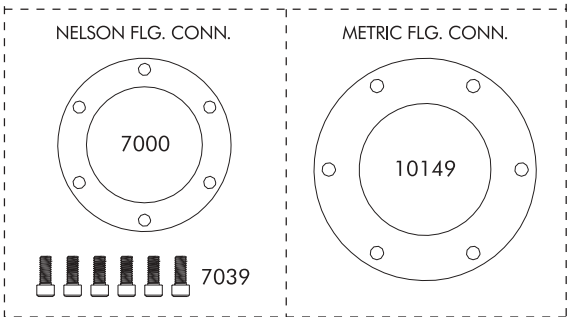

WARRANTY AND DISCLAIMER

Nelson Big Gun sprinklers are warranted for one year from date of original sale to be free of defective materials and workmanship when used within the working specifications for which the product was designed and under normal use and service. The manufacturer assumes no responsibility for installation, is limited solely to replacement or repair of defective parts, and the manufacturer will not be liable for any crop or other consequential damages resulting from any defects or breach of warranty. THIS WARRANTY IS EXPRESSLY IN LIEU OF ALL OTHER WARRANTIES, EXPRESS OR IMPLIED, INCLUDING THE WARRANTIES OF MERCHANTABILITY AND FITNESS FOR PARTICULAR PURPOSES AND OF ALL OTHER OBLIGATIONS OR LIABILITIES OF MANUFACTURER. No agent, employee or representative of the manufacturer has authority to waive, alter or add to the provision of the warranty, nor to make any representations or warranty not contained herein.

Nelson Irrigation Corporation 848 Airport Rd. Walla Walla, WA 99362-2271 USA Tel: 509.525.7660 Fax: 509.525.7907 info@nelsonirrigation.com Web site: www.nelsonirrigation.com